Grid Code Review Panel

Thursday 27 August 2020

Online Meeting via WebEx

WebEx details

Meeting link (copy into web browser):

https://uknationalgrid.webex.com/uknationalgrid/j.php?MTID=mb0742aecfcfb19882ad82642f727c6e9

Audio connection:

Telephone: 020 7108 6317

Access code: 130 874 9930

Password: BMkDFYs5n34

nationalgridESO

WELCOME

As we continue to operate in these uncertain times and following best practice from other businesses, we want to adapt to be able to facilitate the governance process in the best possible way. Since moving to virtual Panel meetings, we have found it harder to accurately capture minutes and attribute comments correctly to attendees. We are also conscious of the impact of short periods of poor sound quality. With your consent, we wish to use WebEx to record all Panel meetings to help us accurately document minutes. We want to assure you that the recordings will be explicitly used to document minutes only and the same protocol for Panel meetings still applies in terms of strict confidentiality. As has always been the case, the draft minutes will be sent to Panel and the Chair for approval each month. Once the minutes are approved, the recording will be deleted. A reminder of this and consent will be sought at the beginning of each meeting, to be noted in the minutes.

As the independent Panel Chair, we have tested the appropriateness of recording Panel meetings with Trisha McAuley who is supportive of the approach. We welcome any comments or feedback on this.

nationalgridESO

Introductions & Apologies for absence

- **Apologies**

  Joseph Underwood – Panel Member, Generator Representative
  Alan Creighton – Panel Member, Generator Representative
  Rob Wilson – Panel Member, National Grid ESO Representative

- **Alternates**

  Graeme Vincent – Alternate, Network Operator Representative
  Antony Johnson – Alternate, National Grid ESO Representative

- **Presenters**

  Phil Smith, NGESO – ***Standing Item*** – System Incidents Reporting
  Shazia Akhtar, Code Administrator – EBGL Changes (Slides to follow)
  Joseph Henry, Code Administrator – Grid Code Election Process
  Jennie Groome, Code Administrator – New Proposal Form

- **Observers**

  Bryan Rhodes - Alternate, Offshore Transmission Operator Representative

Approval of Panel Minutes

Approval of Panel Minutes from the Meeting held 30 July 2020

nationalgridESO

Actions Log

Review of the actions log

nationalgridESO

Chair’s Update

An update from the Chair about ongoing relevant work, discussions etc.

nationalgridESO

Authority Decisions

- **GC0133** – Timely informing of the GB NETS System State condition
  [Pending]

In Flight Modification Updates

Review of all Grid Code modifications with current status, next steps and any Panel recommendations

nationalgridESO

Action Log Item - 361

NGESO to report back on the Event (SER089_20) to the Panel Members

nationalgridESO

Local NRAPM in Dumfries & Galloway Group - 27 July 2020

Rob Wilson

Grid Code Review Panel – August 2020

nationalgridESO

Background

- The Dumfries and Galloway group in SP Energy Networks' area has recently experienced a considerable volume of windfarm connections.
- To secure these, a Load Management Scheme (LMS) has been commissioned which will operate when circumstances lead to a higher export from the group than the circuit ratings can sustain.
- LMS schemes are intended to:
  - Permit connections in advance of necessary enabling works usually in areas of the network which are, at times, already operating at or beyond capacity.
  - To facilitate enduring non-firm Transmission access.
  - AND to protect assets from unacceptable overloads.
- This will be experienced particularly in low demand/high generation situations or when assets are unavailable
- 27 July 2020 was a relatively normal day of mixed weather conditions (relatively sunny with moderate wind) and no known unavailability.

Dumfries and Galloway group

GALLEX

- Limit 106MVA
- Load Management Scheme (LMS) installed – which will trip 2 windfarms
- Large volumes of embedded wind and water – **only some visible**
- No active BM units
- Forecast flow normally managed via trades and LMS
- In real time, Emergency Instructions are the only way of instructing **visible** embedded units

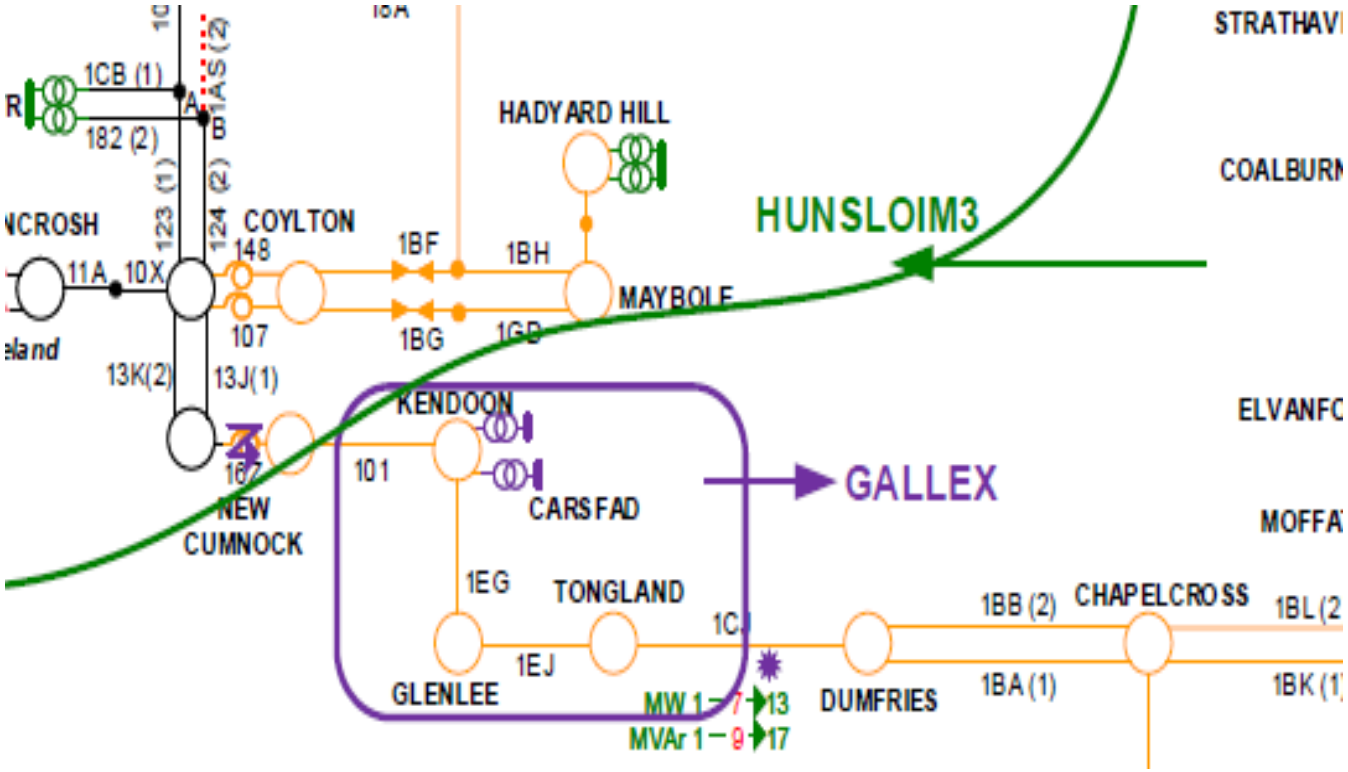

What happened? (1 of 2)

- At 13:37 hours on 27 July the Galloway LMS operated to trip Airies (40MW) and Glenchambers (25MW) windfarms. These have non-firm connection agreements.

- Between this time and 14:00 hours the export flow from the Galloway group continued to rise unexpectedly to the extent that the flow on the Kendoon – New Cumnock circuit exceeded its pre-fault rating.

- With no other Balancing Mechanism options to resolve the flow a Localised NRAPM system warning was issued for the group.

- At 14:25 hours Emergency Instructions were issued to Tongland, Glenlee and Kendoon hydro stations to come off (these stations all have BELLAs and are non-active BM participants).

What happened? (2 of 2)

- The UK was posted to ‘alert’ status on the European Awareness System which shares potentially cross-border issues between European TSOs.
- At its worst point the export flow from the Galloway group was 60MW higher than was expected / forecast.
- Trades were agreed with Cascreugh (11MW) and Artfield Fell (23MW) windfarms from 16:00 hours and the Localised NRAPM and EIs were cancelled at 16:12 hours. The trades were selected on price basis from those available in the group.
- The NRAPM and EIs were posted on the BM Reports ‘System Warnings’ page and were later also cancelled on this.

Dumfries and Galloway Load Management S

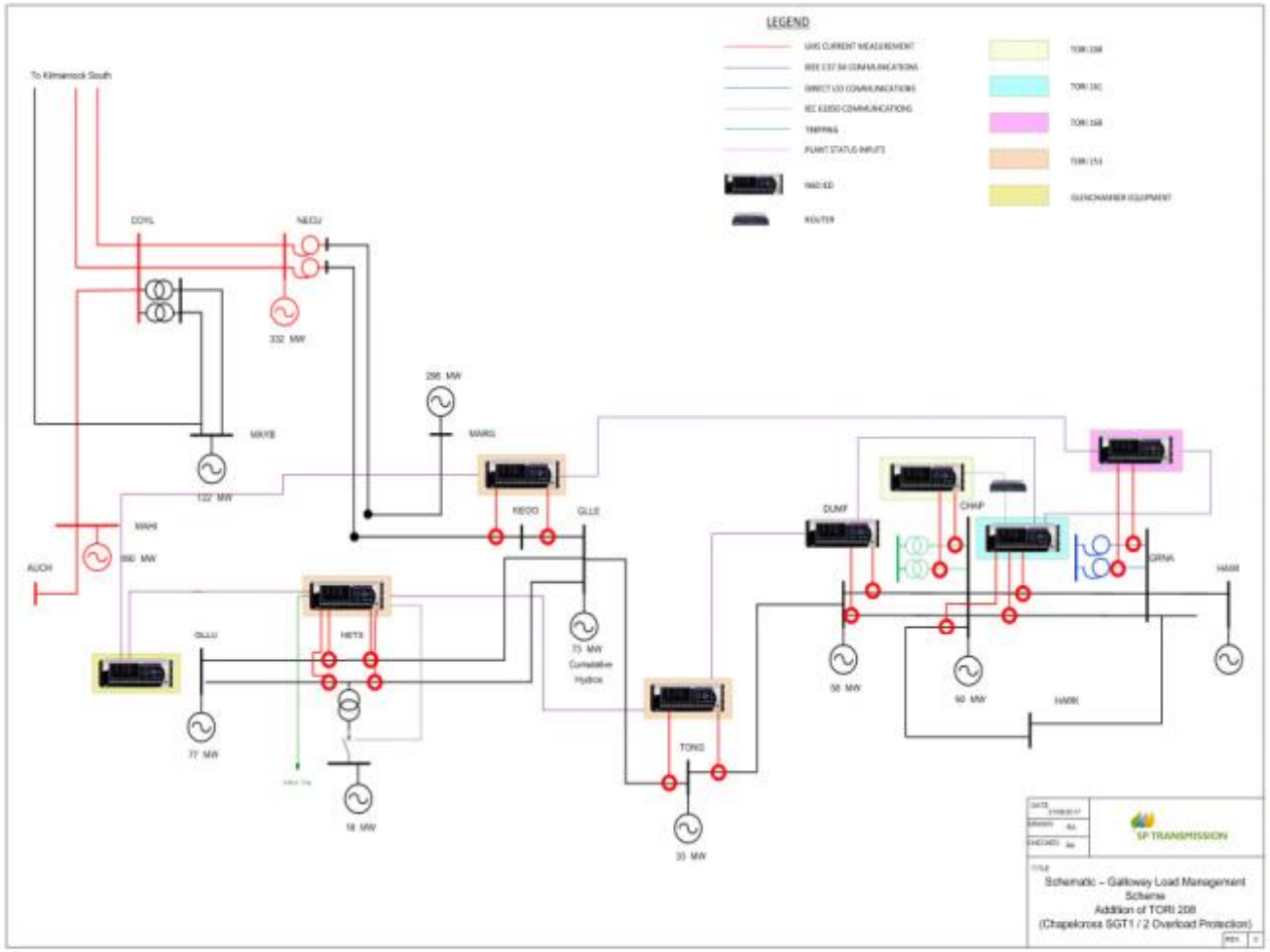

Dumfries & Galloway LMS (TORI 153)

Chapelcross 132kV LMS (TORI 161)

Gretna SGTx LMS (TORI 168)

Chapelcross GSP LMS (TORI 208)

Source: https://www.spenergynetworks.co.uk/userfiles/file/LMS_Workshop_24082017.pdf

Nominations closed 20 August 2020

We have a total of 19 workgroup members, 3 alternates and 1 observer.

Workgroup Members	Company	Role
Andrew McLeod	Northern Powergrid	Workgroup Member
Andrew Vaudin	EDF	Workgroup Member
Brian Morrissey	Scottish Hydro Electric Power Distribution plc	Workgroup Member
Dr Isaac Gutierrez	Scottish Power Renewables (UK) Limited	Workgroup Member
Fungai Madzivadondo	Energy Networks Association	Workgroup Member
Garth Graham	SSE	Workgroup Member
Graham Bone	Infinis Energy Services	Workgroup Member
Grant McBeth	SP Energy Networks	Workgroup Member
Graz Macdonald	Viridis Power	Workgroup Member
Jack Presley Abbott	Centrica Bridd Linited	Workgroup Member
Jeremy Caplin	Elexon	Workgroup Member
John Smart	Southern Electric Power Distribution plc	Workgroup Member
Mark Meyrick	The Renewable Energy Company Limited	Workgroup Member
Matthew Cullen	E.ON UK Plc	Workgroup Member
Paul Graham	Sembcorp Energy Uk Limited	Workgroup Member
Paul Youngman	Drax	Workgroup Member
Richard Wilson	UK Power Networks	Workgroup Member
Rob Wilson	National Grid ESO	Proposer & Workgroup member
Robert Longden	Cornwall Insight	Workgroup Member
Bill D'Albertanson	UK Power Networks	Observer
Alan Crieghton	Northern Powergrid	Alternate
DR Brian Tilley	E.ON UK Plc	Alternate
Peter Dennis	The Renewable Energy Company Limited	Alternate

Dashboard – Grid Code (as at 19 August 2020)

Category	Mar	Apr	May	Jun	Jul	Aug
New Modifications	2	1	3	0	2	0
In-flight Modifications	21	22	25	25	27	27
Modifications issued for workgroup consultation	0	1 *GC0131*	1 *GC0134*	0	1 *GC0131*	0
Modifications issued for Code Administrator Consultation	1 *GC0133*	2 *GC0130* *GC0136*	1 *GC0143*	1 *GC0143*	2 *GC0142* *GC0131*	0
Workgroups held	1	1	4	2	4	4
Authority Decisions	0	0	1 *GC0143,* *GC0096* *GC0105*	0 *GC0132*	0	0
Implementations	1 *GC0135*	0	1 *GC0143*	4 *GC0096* *GC0105* *GC0129* *GC0132*	0	0
Modifications on Hold	1	1	1	1	1	1
Workgroups postponed due to quoracy issues	0	0	0	0	0	0

Grid Code Workgroups for next 3 months (as at 27 August 2020)

August (total = 4)

- GC0145 – 20 and 26 Aug
- GC0139 – 13 Aug
- GC0138/GC0141 – 25 Aug

September (total = 6)

- GC0145 x 2 – 1 Sep and 29 Sep
- GC0147* x 2
- GC0137 x 1 – 22 Sep
- GC0109 – x 1

October (total = 5)

- GC0146 – x1
- GC0141 – x1
- GC0139 – x 1
- GC0147 – x 1
- GC0134 – x 1

November (total = 2)

- GC0145 – x1
- GC0147 – x1

* See Notes explaining what each Modification is seeking to achieve

CUSC Workgroups for next 3 months (as at 27 August 2020)

August (total = 6)

- CMP335/336 – 7 and 13 Aug
- CMP343/340 – 11 and 12 Aug
- CMP328 – 5 Aug
- CMP333 – 24 Aug

September (total = 3)

- CMP328
- CMP344
- CMP330

October (total = 4)

- CMP311
- CMP326
- CMP328
- CMP344

November (total = 4)

- CMP328
- CMP330
- CMP311
- CMP326

See Notes explaining what each Modification is seeking to achieve

STC and SQSS Workgroups for next 3 months (as at 27 August 2020)

August

September
- GSR027 – 4 and 11 Sep

October
- CM074
- GSR027 – 15 and 16 Oct

GSR027 - To address the specific actions from the Energy Emergency Executive Committee (E3C) and Ofgem final reports into the power outage of 9th August 2019 for the ESO to review, in consultation with industry, the NETS SQSS requirements that drive reserve, response and inertia holding on the GB electricity system.

CM074 - Modify the definition of Force Majeure *(*assumes associated CUSC Modification being raised in August 2020)*

BREAK

nationalgridESO

Draft Final Modification Reports

GC0142 - Adding Non-Standard Voltages to the Grid Code

Nisar Ahmed, Code Administrator Representative

nationalgridESO

GC0142 Background

A previous modification (GSR021) to include 220kV assets into the SQSS was rejected by Ofgem in July 2016. This was for the following reasons:

- There were concerns regarding the original proposal having only considered the addition of 220kV as a nominal voltage and did not cover future technological advancements or subsequent new voltage rates.
- The original proposal was also not detailed enough to differentiate how both on and offshore voltages were reported in chapter 6 and chapter 10 of the SQSS.

This modification now seeks to expand the Grid Code to clarify the requirements that will be placed on equipment at non- standard voltages. For reference, currently 400kV, 275kV and 132kV are voltages typically referred to within the Grid Code. This means that any other nominal voltage specifications and requirements are not defined in code.

The proposed changes to the Grid Code should ensure that current and future voltages within the transmission network have clear specification and performance requirements. By including specifications for voltages in such a way that will enable consistency for both the Grid Code and the SQSS.

The same solution will be applied to SQSS via GSR026.

GC0142 Code Administrator Consultation

The Code Administrator Consultation was issued on 13 July 2020 for 1 calendar month with a closing date of 14 August 2020.

3 responses were received from the following industry parties:

- NGESO
- Northern Power Grid
- Scottish Power Renewables

On whether or not the Original better facilitates the Grid Code Objectives than the Baseline.

All three respondents were supportive of the Original solution and that the changes provide additional clarity for Users connected to parts of the transmission system operating at other than a current standard GB voltage. Therefore, it would allow the clear application of the Grid Code to equipment that may be connected in the future at novel voltages.

GC0142 Code Administrator Consultation

On supporting the proposed implementation approach.

All respondents supported the implementation approach and that it will align with the implementation of the changes proposed in GSR026 (SQSS).

However, Scottish Power Renewables (SPR) is concerned that if the non-standard voltages are included in TGN(E) 288, projects cost will increase as it could be the case for offshore windfarm connecting through an HVDC link or any other project where TGN (E) applies.

NGESO recognise that there could be impacts to TGN and other Electrical Standards such as those found in Annex 1 of the General Conditions. However, it was agreed that this was out of scope for this modification. The voltage ranges have been defined to accommodate the EU requirements and the GB requirements of the Grid Code and make them more resilient where possible.

Legal text changes

1 respondent cited 6 issues with the legal text. These have been assessed by the Proposer and they have clarified their position with the respondent – this is set out below:

GC0142 - Code Administrator Consultation – Legal Text

Title of Issue	Details of proposed change by respondent	NGESO response from Proposer
Issue 1: Grid Voltage Variations for **Users** excluding **DC Connected Power Park Modules** and **Remote End**	Should just be 'part' as talking about the part of the NETS that connects to a User system, which would be the same as previous text. The voltage on the 400kV ~~part~~ parts of the **National Electricity Transmission System** operating at nominal voltages of greater than 300kV at each **Connection Site** with a **User** (and in the case of **OTSDUW Plant and Apparatus**, a **Transmission Interface Point**, excluding **DC Connected Power Park Modules**	We can see the logic behind your suggestion and, this could be argued both ways, as in that there is one system but multiple parts in operation. We can raise this in the DFMR and present to Panel.
Issue 2: HVDC Converters ECC.6.1.4.1	Would it not be better to have ranges <132kV, 132kV-300kV, >300kV, this is how most of the rest of the changes are made Looks like an unlimited has been missed from the 4th column for the 110kV up to 300kV	We are not sure what your images are - but, think this is in relation to the ranges? We cannot change this to below 132kV as the normal operating range for below 110kV has different ranges. So for 110kv and below, this drops to 6% as apposed to 10% for 110kV- 300kV. The voltage ranges have been defined to accommodate the EU requirements and the GB requirements of the Grid Code and make them more resilient where possible. Unlimited missing to be raised in the DFMR and present to Panel.

GC0142 - Code Administrator Consultation – Legal Text

Title of Issue	Details of proposed change by respondent	NGESO response from Proposer
Issue 3: Fault Clearance Times ECC.6.2.2.2.2	This is not in-line with the changes as you have re-introduced 132kV as a cut-off point, in other places the ranges are <110kV, (>110kV, <300kV), (>300kV), but aligning this would mean changes to how 132kV is treated, which I understand, but I think this is an inconsistent treatment. (ii) 100ms ~~at 275kV~~ for connections operating at a nominal voltage of greater than 132kV and up to 300kV (iii) 120ms ~~at~~ for connections operating at a nominal voltage of 132kV and below	This refers to protection, we have tried to keep the principles of the current Grid Code the same, but just make it more resilient for the future. We do not feel that we need to make any amendments here to add in below 110kV as the lower limit is currently sat at 132kV.
Issue 4: Fault Clearance Times ECC.6.2.2.2.2	to esnure 'and' logic is applied, this should be "132kV and below *and* where... " On a Power Generating Module (other than a **Power Park Unit**), **HVDC Equipment** or **OTSDUW Plant and Apparatus** and connected to the **National Electricity Transmission System** at 132 kV and below where only one **Main Protection** is provided	'and' logic- can see your point and will add to the DFMR for panel review

GC0142 - Code Administrator Consultation – Legal Text

Title of Issue	Details of proposed change by respondent	NGESO response from Proposer
Issue 5: Fault Clearance Times ECC.6.2.2.2.2	refer to comment above on ranges during the clearance of a fault on the **National Electricity Transmission System** by breaker fail Protection at a nominal voltage of greater than 132kV 400kV or 275kV or of a fault cleared by **Back-Up Protection**	This fits back into the previous responses on ranges
Issue 6: Voltage Fluctuations ECC.6.1.7 Table ECC.6.7.1(b) — Planning levels for flicker	should it not have a minimum, assuming this would not apply to LV supplies. This would likely be e from 1kV to 33k in the UK to align with the definition of high voltage in law.	Not sure what the image is, however, this has been updated to remove specific voltages to align with the rest of the modification. This table is to be reviewed in the P24 workgroup as there are some gaps in the voltage ranges that is not in scope of this modification.

- GR 22.4 Do Panel consider the amendments “typographical”?

Yes → Instruct Code Administrator to make changes to legal text and proceed with vote

No → Direct to a workgroup, or;
→ Instruct Code Administrator to make changes to legal text and re-issue Code Administrator Consultation

GR.22.4 A draft of the **Grid Code Modification Report** shall be tabled at the **Panel Meeting prio**r to submission of that **Grid Code Modification Report** to the **Authority** as set in accordance with the timetable established pursuant to GR.19.1 at which the Panel may consider any minor changes to the legal drafting and:
i (i) if the change required is a typographical error the **Grid Code Review**

Panel may instruct the **Code Administrator** to make the appropriate change and the **Panel Chairman** will undertake the **Grid Code Review Panel Recommendation Vote;** or
i (ii) if the change required is not considered to be a typographical error then

the Grid Code Review **Panel** may direct the **Workgroup** to review the change. If the **Workgroup** unanimously agree that the change is minor the **Grid Code Review Panel** may instruct the **Code Administrator** to make the appropriate change and the **Panel Chairman** will undertake the **Grid Code Review Panel Recommendation Vote** otherwise the **Code Administrator** shall issue the **Grid Code Modification Proposal** for further **Code Administrator** consultation after which the **Panel Chairman** will undertake the **Grid Code Review Panel Recommendation Vote.**
i (iii)if a change is not required after consideration, the **Panel Chairman** will undertake the **Grid Code Review Panel Recommendation Vote.**

- **Ask of Panel:** Recommendation Vote
- Final Modification Report to be issued
- Timetable below:

Stage gate	Date
Circulation of Final Modification Report for Panel review ahead of submission to Authority (5 working days)	03 Sept 2020
Final Modification Report submitted to Authority for decision	14 Sept 2020
Anticipated Decision from Authority (25 working days)	19 Oct 2020
Implementation date	10 working days after Ofgem decision

Reports to Authority

None

nationalgridESO

Implementation Update

None

nationalgridESO

Electrical Standards

No Update

nationalgridESO

Governance

None

Grid Code Development Forum and Workgroup Day(s)

nationalgridESO

Grid Code Development Forum and Workgroup Day(s)

August Grid Code Development Forum and Workgroup Days

Workgroup Days – 04 and 05 August 2020

GCDF – 05 August 2020 – Agenda:-

- Last resort disconnection of Embedded Generation – enduring solution Update (GC0147 Rob Wilson - ESO)

September Grid Code Development Forum and Workgroup Days

Workgroup Days – 01 and 02 September 2020

GCDF – 02 September 2020 – Draft agenda as follows:-

- Industry Codes and Early Competition – Mike Oxenham (NG ESO)
- Update on findings from E3C report related to 9 Aug Event – Matthew Deitz (Energy UK)

Standing Items

- **Distribution Code Panel update** (Graeme Vincent)
- **JESG Update** (Nisar Ahmed)
- **System Incidents Reporting** (Phil Smith)

nationalgridESO

JESG Update

Joint European Stakeholder Group meeting scheduled for 11 August 2020 was cancelled.

No Update.

System Incidents Reporting timeline – Phil Smith, NGESO

22 May 2020	✓ GC0105 approved
08 June 2020	✓ GC0105 implemented
12 June 2020	✓ Publish **Historic Frequency Data** (May data)
25 June 2020	✓ Present draft **System Incidents Report** (April data) to GCRP
15 July 2020	✓ Publish **Historic Frequency Data** (June data)
22 July 2020	✓ GC0105 page go-live on ESO website
30 July 2020	✓ Present **System Incidents Report** (May data) to GCRP
17 August 2020	✓ Publish **System Incidents Report** (May data) – *awaiting update on 1st May incident*
7 August 2020	✓ Publish **Historic Frequency Data** (July data)
27 August 2020	✓ Present **System Incidents Report** (June data) to GCRP
31 August 2020	Publish **System Incidents Report** (June data)
October 2020	Publish one-off catch up **System Incidents Report** covering Nov-19 to Mar-20

nationalgridESO

Updates on other industry codes

nationalgridESO

Horizon Scan

(February, May, August, November)

nationalgridESO

Horizon Scan – Antony Johnson, NGESO

	2020	2021	2022
	J A S O N D	J F M A M J J A S O N D	J F M A M J J A S O N D
HVDC Data Modules (Chris Smith)	Q3	*Expert Group to be set up in Q3*	
SOGL Article 118 & 119	Q3 / 4	*Mod to be raised in Q3/4*	
Distributed Restart *Might be covered as part of E&R Phase II*	Q4	*Mod to be raised in Q4*	*ESO project end date March 2022* M
GC0117 - Aligning GB thresholds for Small / Medium / Large Power Stations	N	*Workgroup to restart in November at the earliest*	
Energy Codes Review		Q1 '21 *Delayed - work not expected to begin before 2021*	
Whole System Technical Code Digitisation		Q2 '21 Beginning in Q2 2021 for RIIO-2	
RFG Phase 2			*Expected to start in* **2022**

nationalgridESO

Blockers to Modification Progression

(February, May, August, November)

nationalgridESO

Blockers

Blocker Code	June 2020		July 2020		Aug 2020		Comments
	Count	Mods affected	Count	Mods affected	Count	Mods affected	
Quoracy	0		0		1	GC0146	GC0146 – need additional two workgroup members to be quorate. Only 3 workgroup members secured during nominations
Prioritisation	2	GC0137 GC0117	3	GC0137 GC0117 GC0138/141	2	GC0137 GC0117	GC0137 - New modifications received higher priority at Panel. However, work has been done in the background through active workgroup members. GC0117 - Progression of workgroup delayed by position lower in the stack. GC0138/141 down capacity due to other modifications taking priority. However, next workgroup planned for 25 August.
ESO delay	1	GC0126	1	GC0126	1	GC0126	GC0126 – NGESO Information services invited to present at Panel.
Code Administration delay	0		1	GC0136	0		GC0136 Implementation deferred following conversion issues for legal text.
Industry delay	0		0		0		
Legal issues	1	GC0132	0		0		GC0132 had a minor typographical error in the Legal Text. Panel agreed to remove the error. As per the governance rules they had 5 working days to review their decision.
Ofgem send back	0		0		0		

Critical Friend Quarterly Update

Nisar Ahmed, Code Administrator Representative

nationalgridESO

6 Grid Code Modification Proposals received from 1 May to 15 July inclusive

- All 6 have had all critical friend checks undertaken on;
- For all 6 of these, required communications were sent to Independent Chair, Panel and industry within agreed timescales (i.e. on the next working day after Modification Proposal Submission Date); and
- Note there have been 9 CUSC Modification Proposals raised in the same period.

General areas of feedback (across all CUSC and Grid Code Modifications)

- Continue to seek definition of acronyms and not assume the reader has a prior understanding of the proposed change;
- For Implementation, asking Proposer to clarify when they need a decision by as well as Implementation Date;
- Continue to develop timeline options for Proposers and Panel to consider; and
- We need to remove areas of repetition.

Feedback we will act on to further improve our service:

- Ensure the proposed solution is not the defect – the defect is the issue that the proposal is looking to resolve;
- Ensure that both the date decision needs to be made by and the actual Implementation Date are clear;
- Reconcile Governance Route to the material impact of the Modification on Users;
- Continue to have discussions with Proposers ahead of Modification Proposal Submission Date so clear on expectations, level of detail and process; and
- New simpler Proposal Forms, which are easier to use and remove repetition.

Any thoughts from Panel so far?

- Are you seeing better quality Modification Proposals?
- Is this reporting still of use to Panel?
- Any further feedback?

Forward Plan Update/Customer Journey)

- Critical Friend Quarterly Update (NA)
- Updated Proposal Form (NA)
- EBGL Update on the process changes (SA)

nationalgridESO

AOB

1. Update on the Grid Code election process (Joe Henry, NGESO)
2. General discussion on impacts of coronavirus outbreak (ALL)

nationalgridESO

Next Panel Meeting

10am on 24 September 2020 via WebEx

Papers Day – 16 September 2020

Modification Proposals to be submitted by 09 September 2020

nationalgridESO

Close

Trisha McAuley

Independent Chair, GCRP

nationalgridESO