FFCI expert working group

Enstore VSM presentation

Eric A Lewis **Enstore**

 Copyright 2018 all rights reserved

Index

- Section 1. Commercial conditions.
- Section 2. The VSM data.
- Section 3. Summary.

 Copyright 2018 all rights reserved

Acronyms

EFCC	Enhanced Frequency Control Capability project.
ESU	Electricity Storage Unit.
FFC	Fast Fault Current.
FFCI	Fast Fault Current Injection.
GFR	Grid Fault Ride-through.
GTP	Generator Terminal Point.
MTP	Module Terminal Point.
PPU	Power Park Unit.
RoCoF	Rate of Change of Frequency.
SGU	Synchronous Generator Unit.
ST	Station Transformer.
TIP	Transmission Interface Point for generators of all types.
UT	Unit Transformer.
VSM	Virtual Synchronous Machine.
$X^{II}d$	Impedance of the SGU that defines the initial value for a short circuit Fast Fault Current.
Xi	Impedance of the inverter inductor and inverter transformer.
Xtg	Impedance of the generator's station transformer.
Xti	Impedance of the inverter's station transformer.

 Copyright 2018 all rights reserved

- **Section 1. Commercial conditions.**

 Copyright 2018 all rights reserved

Commercial conditions

1. This Power Point presentation has a reference of "**FFCI Expert Working Group Enstore VSM 1- 001"** hence called **The Data.**
2. **The Data** has been produced by **Enstore** to assist the **Receiving Company** in the understanding of the Design of transmission connected units.
3. **Enstore** has no liability in any way whatsoever for any use of **The Data** by the **Receiving Company.**
4. **The Data** was all produced by **Enstore** and is the property of **Enstore.**
5. **The Data** has been produced by **Enstore,** based on data available in the public domain, and does not contain any Enstore IPR.
6. **Enstore** grants unrestricted rights to the **Receiving Company** in the internal and external use of **The Data.**

Signed by…*Eric A Lewis* … Eric A Lewis Company Director. 09-05- 20187

 Copyright 2018 all rights reserved

- **Section 2. The VSM data**

 Copyright 2018 all rights reserved

The VSM concept

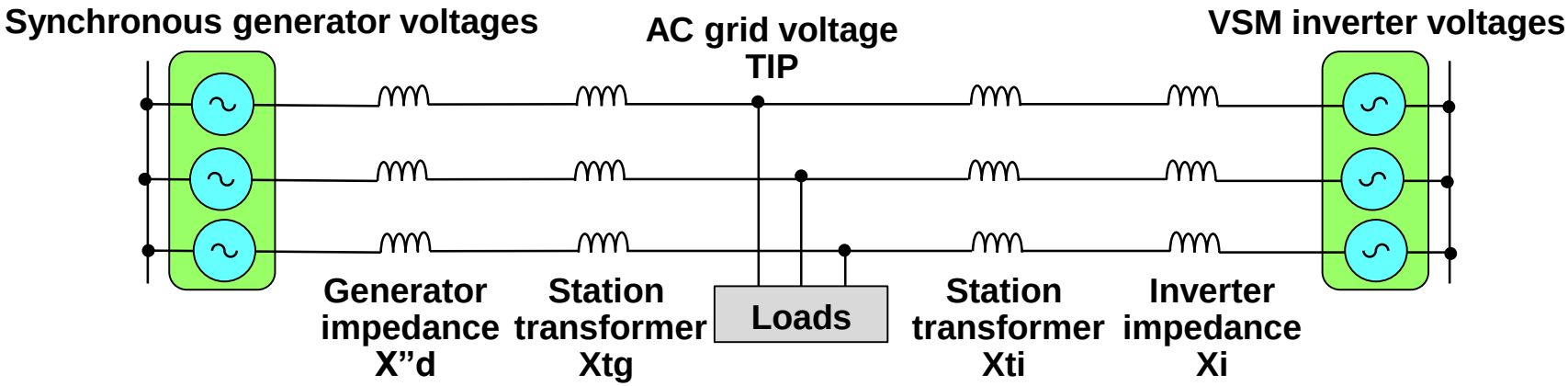

- Have slowly changing AC voltages.
- Produces immediate AC current for both AC grid voltage and AC grid phase changes with the rate of rise of current set by the generator’s X”d + Xtg.
- For RoCoF changes the energy comes from the generator’s rotating inertia with no control system delays.
- Produces immediate FFCI.
- Produces damping power to damp grid oscillations.

Equivalent

- Have slowly changing AC voltages.
- Produces immediate AC current for both AC grid voltage and AC grid phase changes with the rate of rise of current set by the inverter’s Xi + Xti.
- For RoCoF changes the energy comes from an energy store on the inverter’s DC bus with no control system delays.
- Produce immediate FFCI.
- Produces damping power to damp grid oscillations.

VSM inverters with a correct design can supply the same Significant Benefits provided by rotating synchronous generators.

 Copyright 2018 all rights reserved

System impedance vales and Fast Fault Current

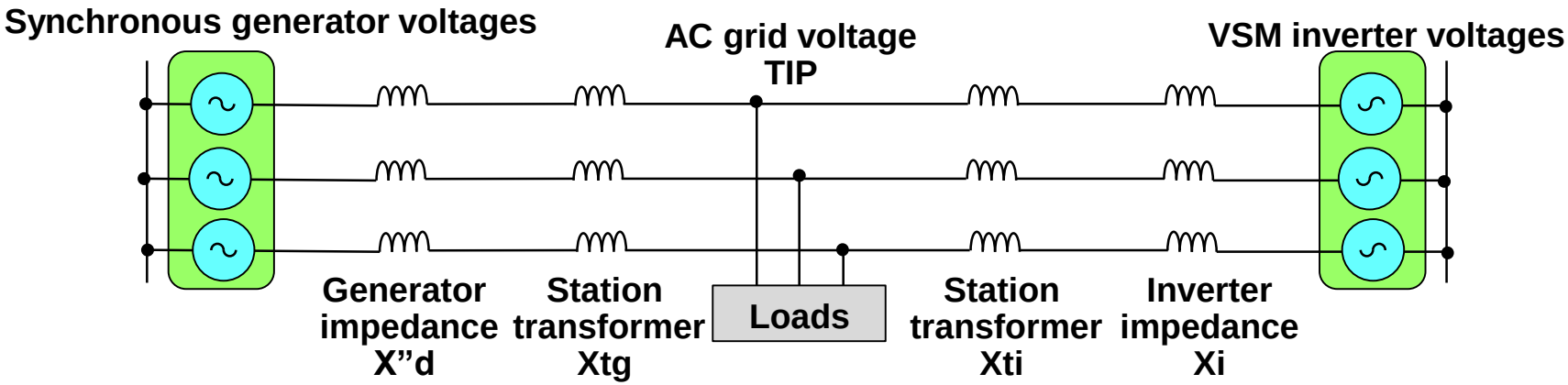

- X”d is typically 0.15 to 0.25 pu.
- Xtg is typically 0.15 to 0.22 pu.
- Total is typically 0.30 to 0.47 pu.
- For an AC fault the generator’s voltages produce fast FFCI.
- This gives a symmetrical three phase Fast Fault current of 2.12 to 3.33 pu at the TIP.

Equivalent

- Xi is typically 0.15 to 0.20 pu.
- Xti is typically 0.15 to 0.22 pu.
- Total is typically 0.30 to 0.42 pu.
- For an AC fault the inverter’s voltage produce fast FFCI with a similar rate of rise.
- To avoid trips with grid faults must exit VSM control to use very fast acting continuous control loops.
- An inverter rated at 1.5 pu FFCI at the TIP is a very viable equivalent.

- To export reactive current requires voltages above the TIP voltage.
- Limiting the need to export reactive current at TIP over voltage levels significantly reduces the inverters cost .

 Copyright 2018 all rights reserved

National Grid reactive current proposals for power parks

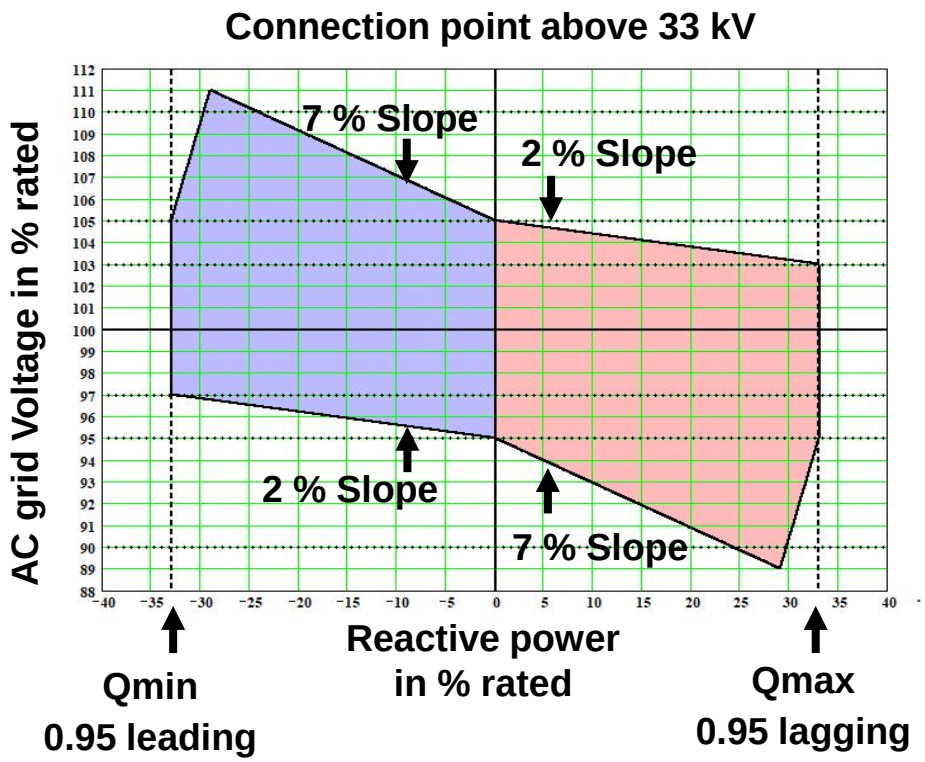

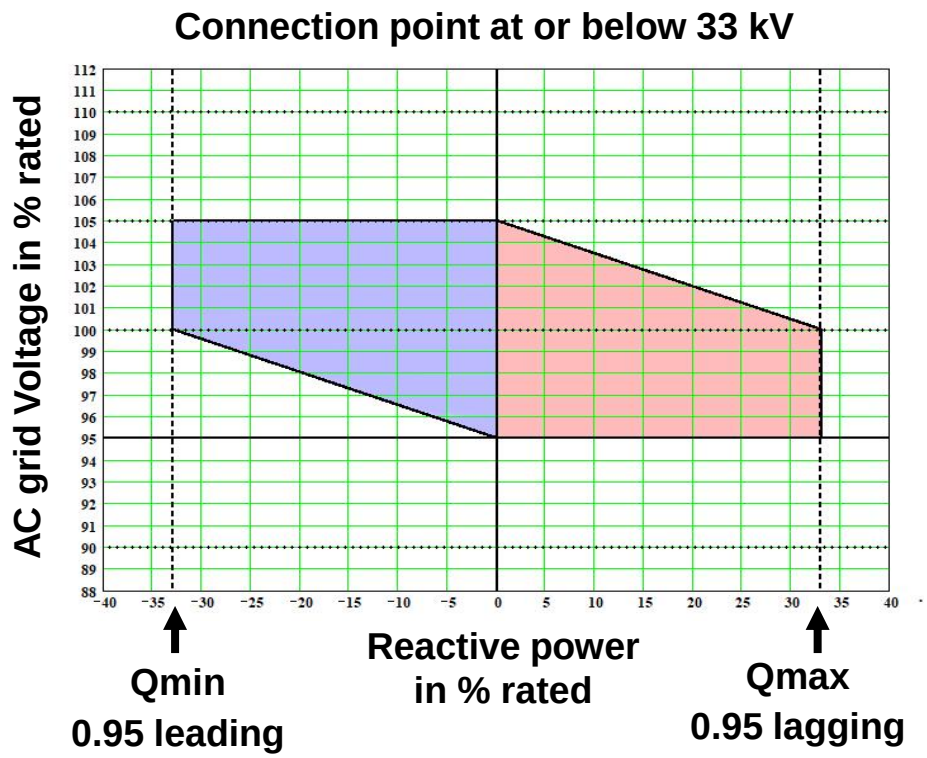

- Lagging is exporting reactive power to increase the AC grid voltage which needs an inverter voltage above the grid entry point voltage.
- Exporting reactive power via the impedance of the station transformer and inverter impedances does require a significant inverter voltage margin above the nominal unity power factor voltage rating.
- For both graphs the required export of reactive current is limited at high AC voltages which minimises the inverter voltage required.
- The same comments apply to rotating synchronous generators.

 Copyright 2018 all rights reserved

Inertia requirement for a future UK grid

- The main inertia equation is RoCoF (Hz / s) = (50 x Mwdelta) / (2 x H x Installed MVA).
- H = (Stored inertia MWs) / (Installed MVA rating) and H has a typical range of 2 to 9.
- This H value uses the National Grid equation based on MVA.
- This presentation uses H at 1.0 PF giving H = (Stored inertia MWs) / (Installed MW rating).
- A range of grid RoCoF rates and associated data are in the EFCC table 3.1 for a 900 MW transient.
- A worst case power loss causes the AC grid frequency to fall but it should ideally stay within the EFCC 49.2 Hz limit given by having the appropriate primary and secondary power response available.
- For RoCoF rates higher than approximately 0.2 Hz / s requires a fast rising primary response power that is most likely to required battery based electricity storage systems.
- The VSM system can supply this fast rising primary response power but it significantly increases the cost of the required inverter's energy store.
- If have sufficient electricity storage to provide the primary response power with VSM control this then means that renewable energy systems only need to provide the inertia response power.

RoCoF (Hz/s)	Slow Progression	Gone Green	Inertia GW/s	Action Time (to reach 49.2Hz)	Response Rate (MW/s)
0.125*	2013/14	2013/14	360	9	185
0.2	2019/20	2018/19	225	4	400
0.22	2022/23	2019/20	205	3.4	489
0.25	2023/24	2020/21	180	2.4	679
0.3	2024/25	2021/22	150	1.2	1148

Table 3.1 - Future Ramp Rate Requirements with decreasing System Inertia

 Copyright 2018 all rights reserved

Inertia factors to be considered

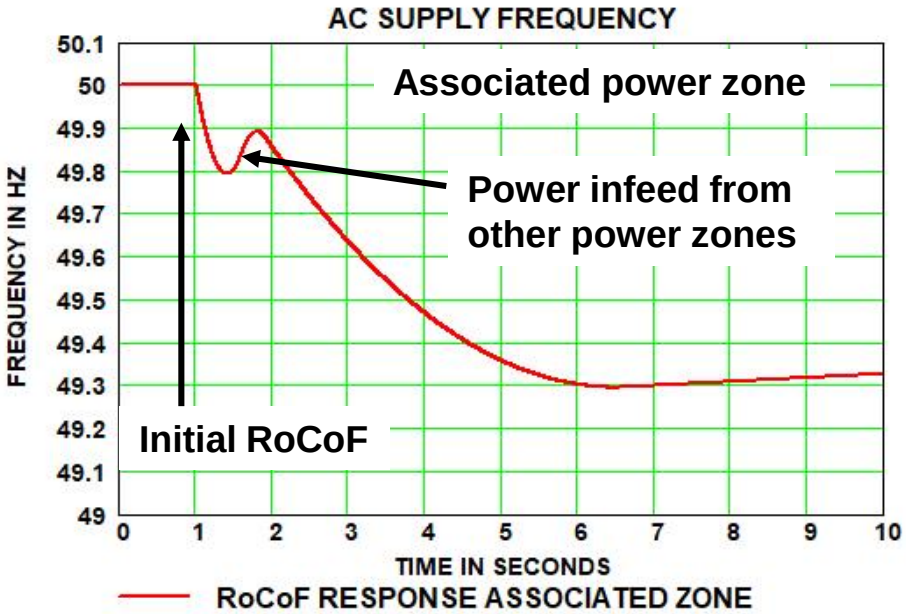

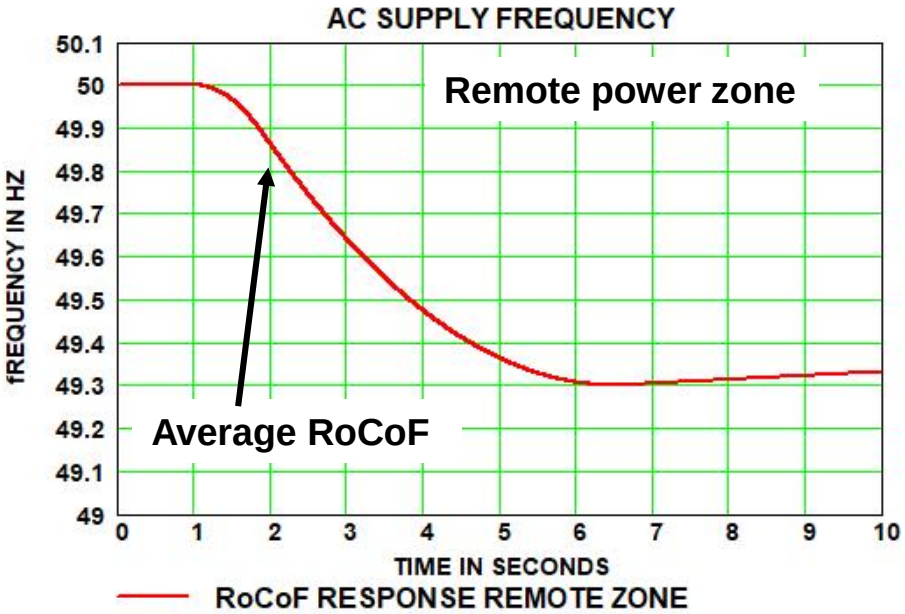

- **The largest power transient is increasing from 1 GW to 1.8 GW and for a large power transients the associated power zone has a high initial RoCoF.**
- **The initial RoCoF in the associated power zone can be up to 1 Hz per second but then rapidly reduces down to the average RoCoF value as inertia power flows in from other remote power zones.**
- **The RoCoF rates in all the other remote power zones is the Average RoCoF response.**
- **In designing the VSM energy store the initial and average RoCoF must be considered, together with distributed inertia in each power zone to limit the initial RoCoF.**
- **The primary response power should be based on the worst case average RoCoF.**
- **Increasing the allowed average RoCoF will also increase the worst case initial RoCoF.**

 Copyright 2018 all rights reserved

Selection the Average RoCoF rate

Shows three design choices for a 1800 MW transient of 0.25 to 0.35 Hz/ s

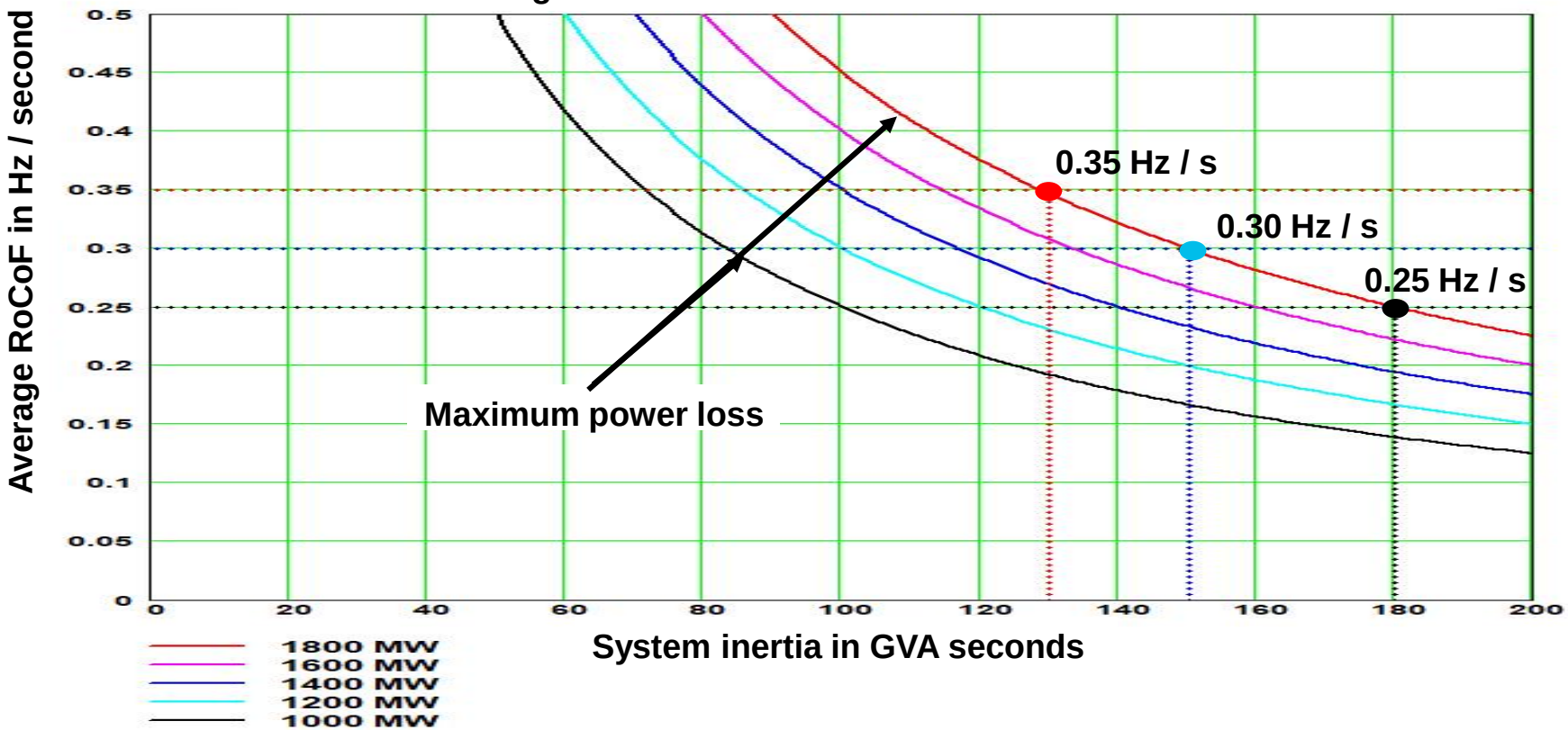

- To have average RoCoF rates below 0.3 Hz / s the grid inertia needs to be kept above 150 GVA s.
- At present for a large power transient a frequency fall occurs and all the generators stay synchronised at the same frequency with increasing but different phase angles and overloads as they provide inertia power, however if the generators become overloaded they will pole slip and trip.
- What are the initial and average RoCoF rates that will avoid synchronous generator pole slipping ?
- For VSM systems they must also stay synchronised with similar phase angle changes, but can have limits to stop the phase angle exceeding 90 degrees (pole slip avoidance).

 Copyright 2018 all rights reserved

Inertia response in a power zone with 1.0 Hz / s RoCoF

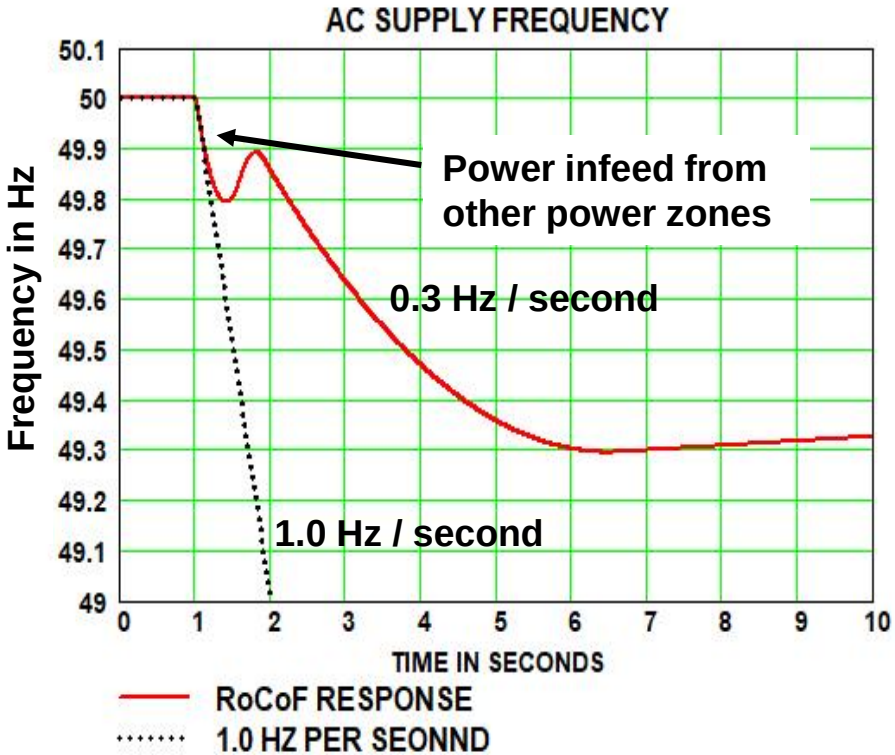

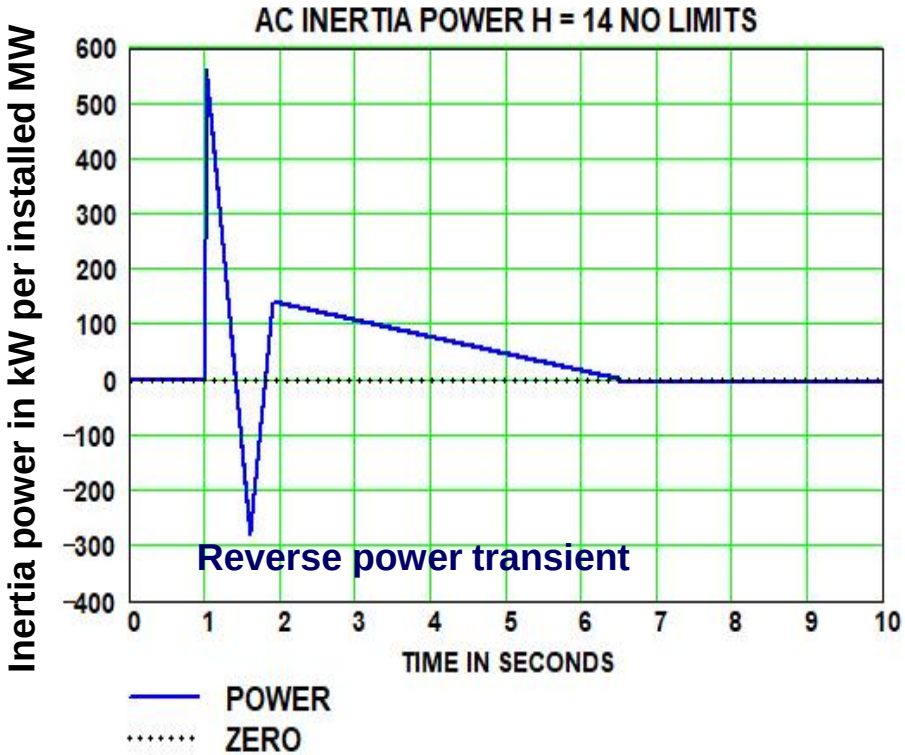

- Synthetic inertia power produced in kW per MW = 40 x H x RoCoF.
- Graph shows the use of an H = 14 synthetic inertia rating because with H = 7 the inertia power for an average RoCoF of 0.3 Hz / s is only 84 kW.
- For an economical VSM system it is desirable to have a power limit on the initial RoCoF rate.
- Can then use a High H value to increase the systems inertia for the Average RoCoF value.
- Also desirable to suppress the reverse power transient to increase the systems damping.

 Copyright 2018 all rights reserved

Range of ratings for VSM systems

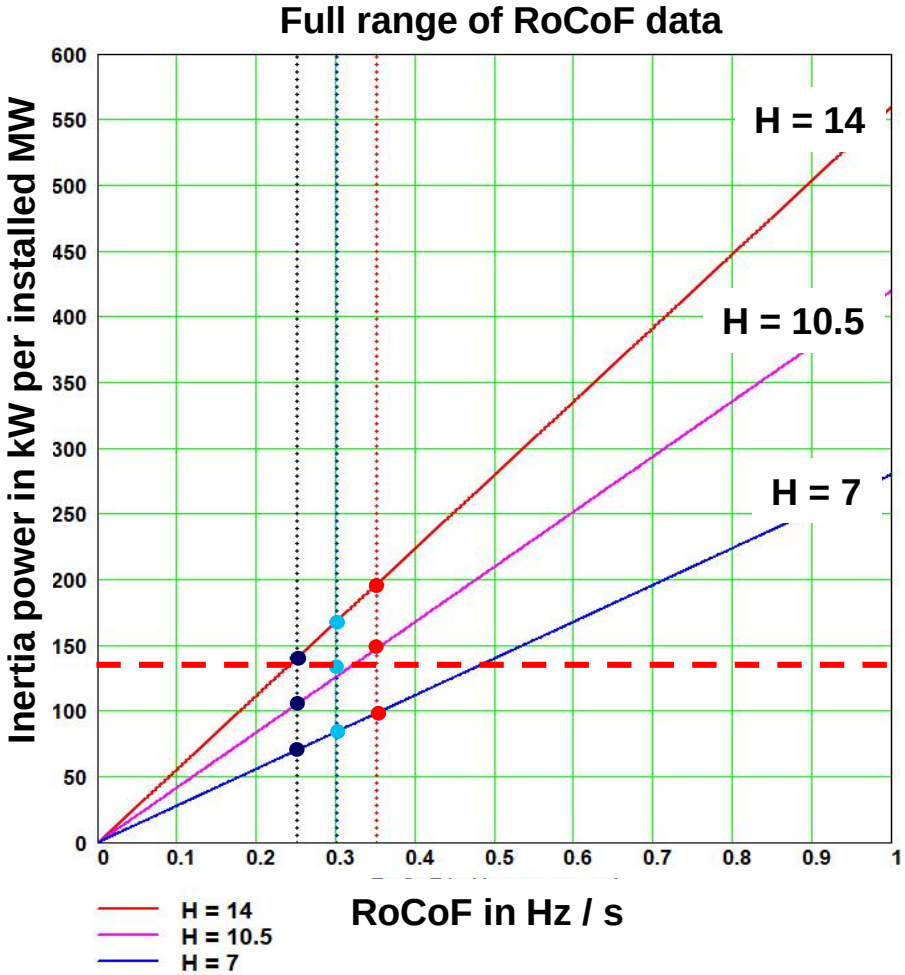

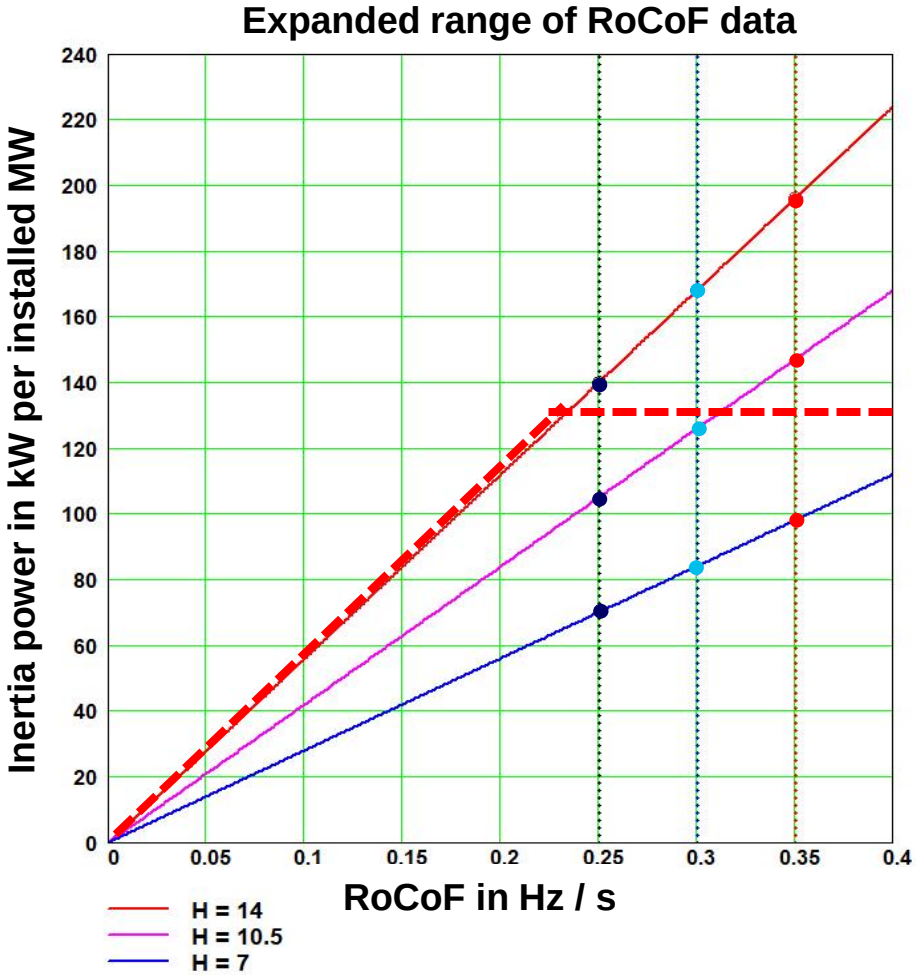

- With VSM can have a limit on the power produced for high RoCoF values.
- With VSM can select a high RoCoF value like 14 to give an increased inertia response.
- A good stating point is a inertia power limit rating of approximately 130 kW per installed VSM MW.
- This will give a H = 14 response for RoCoF rates up to 0.23 Hz per second and then power limit.

 Copyright 2018 all rights reserved

Data on a possible VSM response with power limiting

- **This is the simulated inertia power response of a VSM with H = 14 in a local power zone with an Initial RoCoF of 1 Hz per second that then falls to an Average RoCoF of 0.3 Hz per second.**
- **The middle power graph has a power limit of 130 kW with a circuit to supress reverse power and only supplies inertia power.**
- **The right hand power graph has a power limit of 130 kW and at 4 seconds the EFCC control, or other control, turns on the primary response power ability for a defined time which requires a significantly larger energy store.**
- **A typical energy store rating is 400 kW seconds for inertia power.**
- **Adding the primary response power does need a larger VSM energy store typically 2500 kW seconds.**

 Copyright 2018 all rights reserved

A typical wind power VSM system

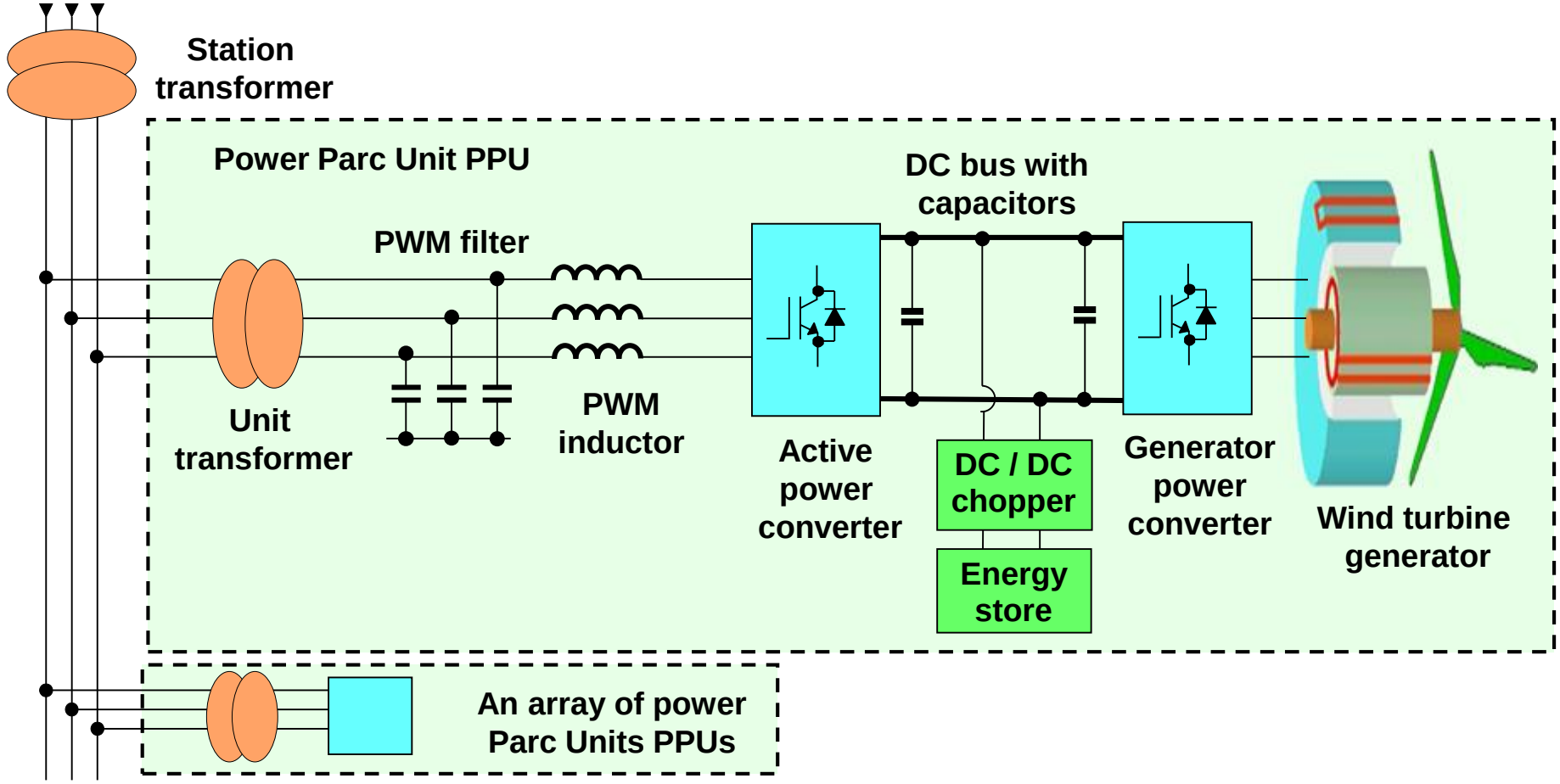

- The main extra is a fast acting energy store on the DC bus.
- This will almost certainly need a DC / DC chopper to use a small energy store with a fast response that maintains the DC bus voltage within design limits for large RoCoF events.
- The capacitors on the DC bus give time for the DC / DC chopper to operate.
- The same applies to a solar power system that only use the active power converter.

 Copyright 2018 all rights reserved

Provision of inertia response power – Ultra capacitors

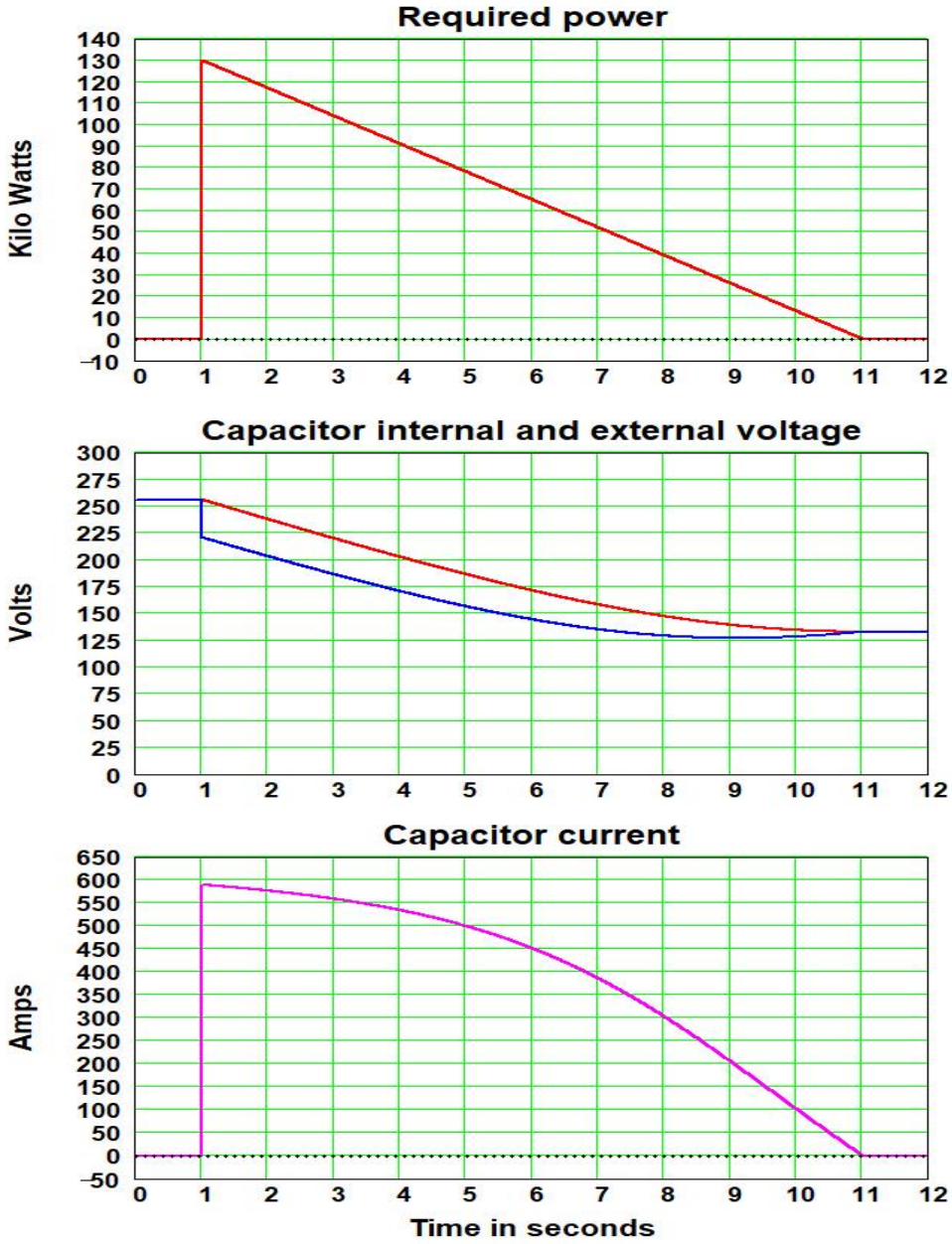

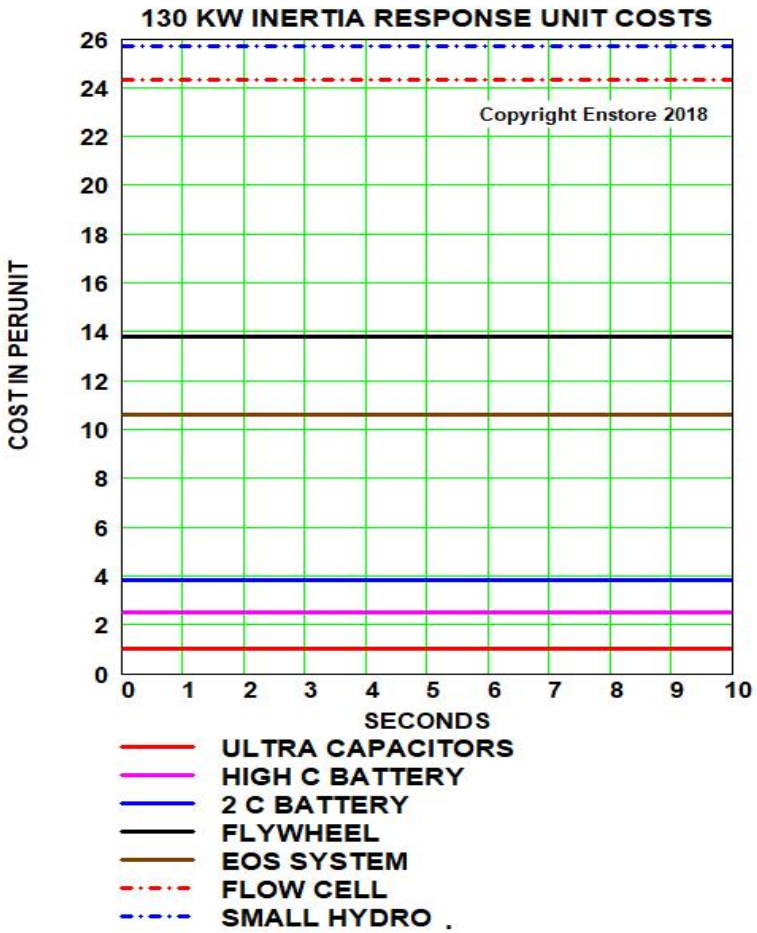

- **The basic 1 per unit COST Ultra capacitors will provide 130 kW falling to zero in 10 seconds for a inertia response with more than 1 million power cycles.**
- **The costs of the other solutions are significantly higher.**

 Copyright 2018 all rights reserved

VSM energy store constant power per unit relative costs

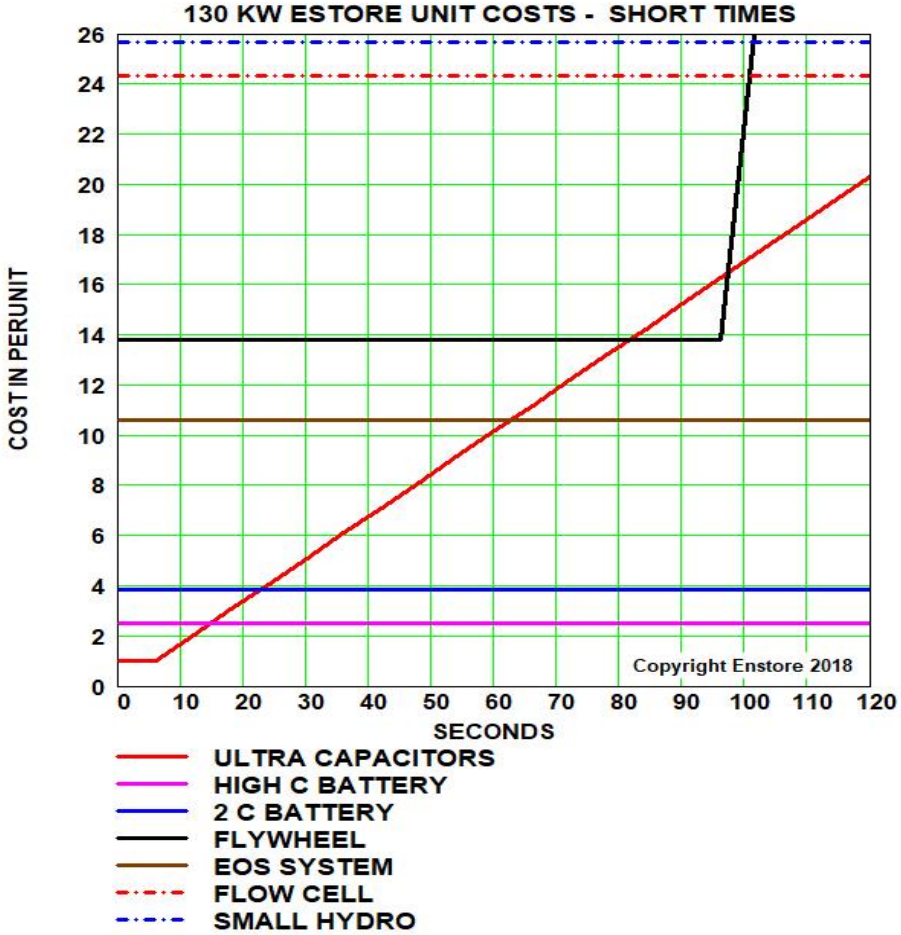

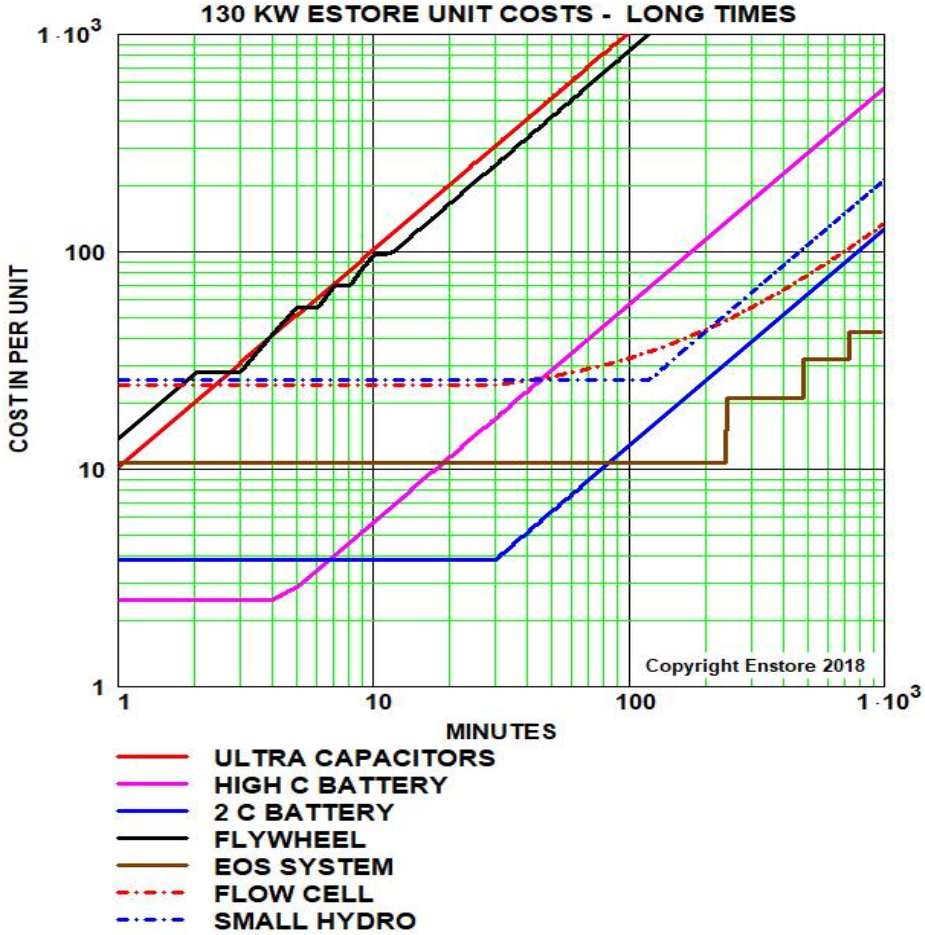

- This is the cost of just the VSM energy store with the inertia power Ultra capacitors taken as 1 pu.
- The AC flywheel cost include a DC to AC power inverter.
- Can linearly scale either the horizontal or vertical axis for higher times or powers.
- Can use the ultra capacitors to provide a primary power response for 20 to 30 seconds at an increased cost with a life of 1 million cycles to accept the frequent grid phase variations.

 Copyright 2018 all rights reserved

Basic VSM requirements – Transient wind power changes

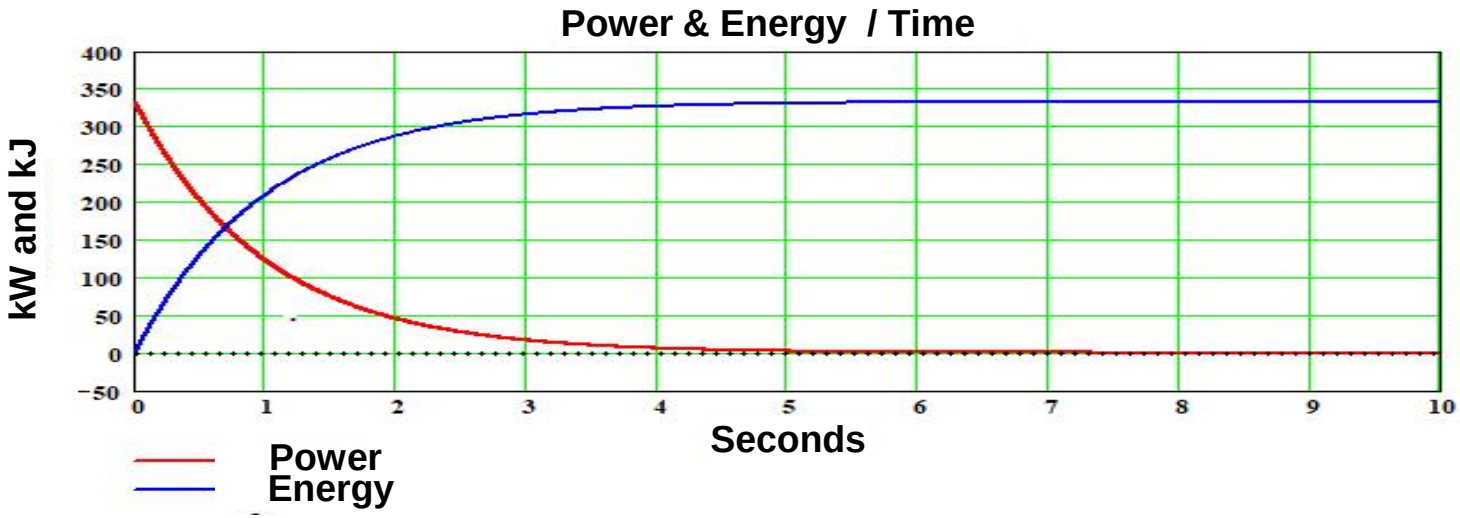

- With an AC grid fast phase angle change the VSM will transiently deliver up to agreed kW per installed MW and this will then reduce, in the response time of the power loop, back to the existing renewable energy value.
- The response time of the power loop determines the magnitude of the stored energy needed to provide the VSM response.
- The graph shows the response for the National Grid proposal of 330 kW with an energy of 280 kWs.
- To deliver this response power control response is set at 0.2 Hz (1.25 radians / s) bandwidth which is a 0.80 second time constant.
- Solar power will also require energy storage for even the basic short transients.
- The response of the power loop uses a smaller energy store than the inertia response but these changes must be considered versus the life of the energy store.

 Copyright 2018 all rights reserved

VSM rating proposals

- To implement a standard for wide spread use of a VSM system then it is essential that the requirements are specified, minimised and fully justified so that relevant suppliers can proceed to implement designs.
- If abilities above minimum values then these also need to be specified so that suitable market led reward mechanisms can be defined and implemented.
- The data has two versions:
  - Power area is the same as the National Grid proposal with the added green area for FFCI.
  - Power area is a reduce value with the added green area for FFCI.

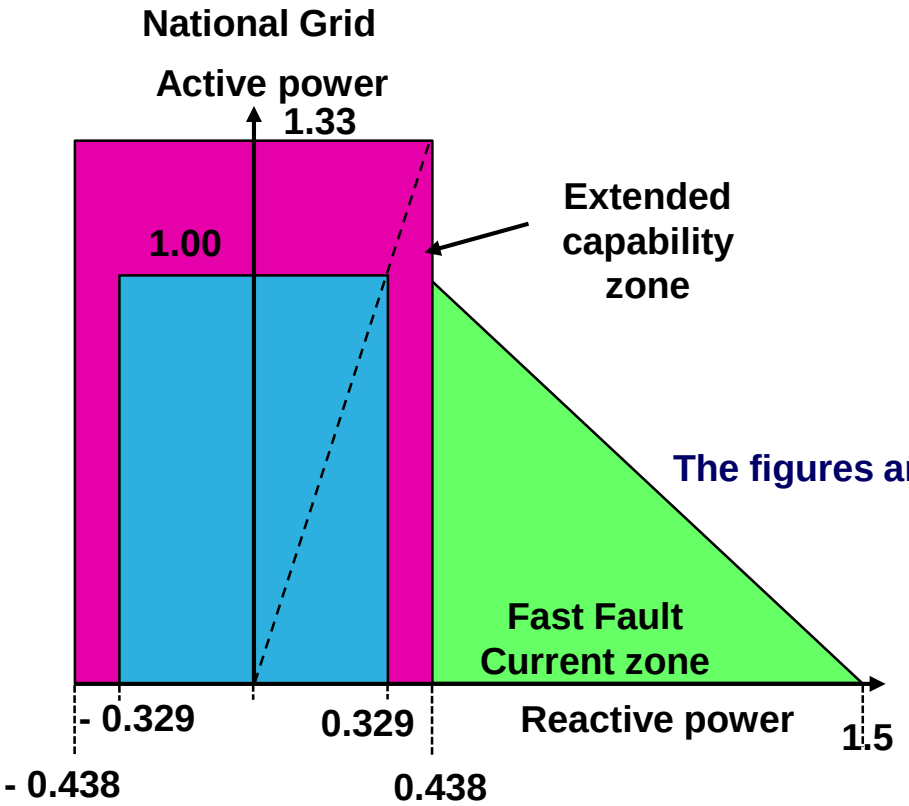

The figures are to scale.

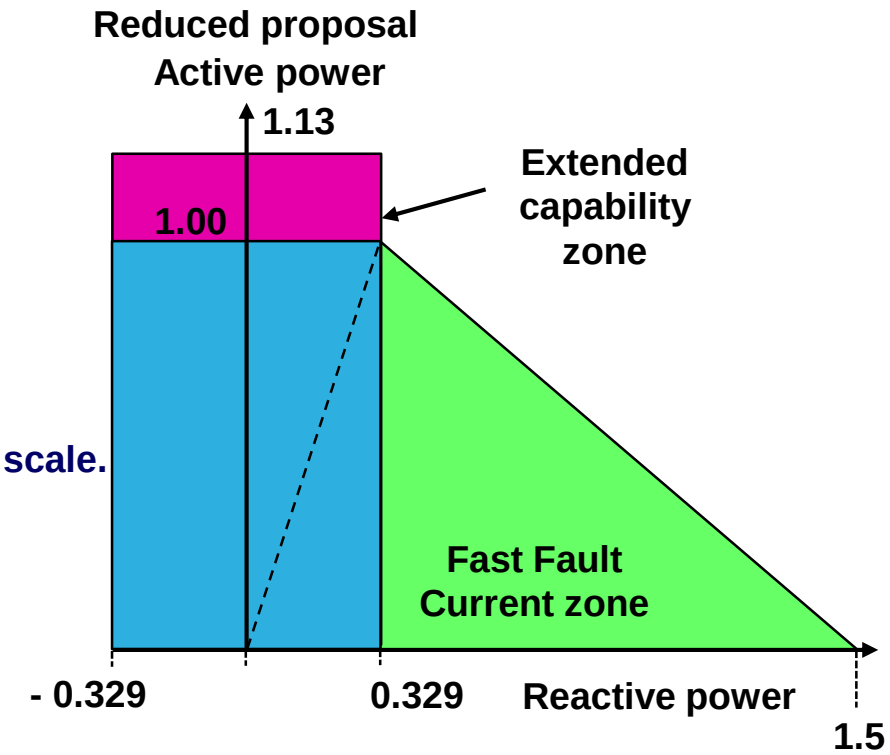

 Copyright 2018 all rights reserved

VSM operating modes

- **VSM operating mode 1 delivering power .**

  Providing a balanced set of positive sequence three phase voltages that only change at agreed rates like a rotating synchronous generator. This response time for power recovery is not defined.

  If a grid voltage transients occurs the VSM will immediately deliver extra reactive power with a grid voltage control system having a response limited to a 5 Hz (31 radians / s) bandwidth.

  To have a response to the grid frequency with a gain profile in line with the Grid Code standards.

- **VSM operating mode 2 delivering Fast Fault Current.**

  Delivering a Fast Fault Current of 150% within 20 milliseconds, see note 1.

- **VSM operating mode 3 delivering Inertia power.**

  Delivering a fully synchronised Inertia power response with an increasing phase lock in a way similar to rotating synchronous generator with an H value of 2 to 7 or even higher in the frequency range 47 to 52 Hz. The National Grid proposal is to provide up to 330 kW per installed MW but should consider using 130 kW per installed MW.

- **VSM operating mode 4 delivering damping power.**

  To deliver a limited damping response based on phase angle variations, this may require the addition of a damping power control loop.

- **VSM operating mode 5 reactive current overload.**

  If large voltage changes occur the reactive current will be limited to a specified values, see note 1.

- **VSM operating mode 6 real current overload .**

  If large phase angle changes occur the power current will be limited to a specified values, see note 1.

Note1. The modes 2, 5 and 6 need to use very fast controls with a typical 100 Hz bandwidth to control the current within the agreed limits without tripping by rapidly changing voltage and phase.

 Copyright 2018 all rights reserved

- **Section 3. Summary.**

 Copyright 2018 all rights reserved

Summary

Several topics need to be discussed and finalised to rate a VSM system:

- Initial and average RoCoF design value.
- Use of a +ve VSM power limit for high RoCoF values but staying synchronised.
- Use of a zero power limit to suppress the negative transients.
- Selecting the H value to be used.
- Selecting the peak VSM power limit.
- Selecting the time for the inertia response.
- Selecting the maximum allowed frequency change.
- Selecting the time for an inertia plus the optional primary power response.
- Effects of the ratings on the cost of the energy store and the choice of the energy store technology.

Other topics to be discussed :

- An interconnector trip will produce an upward power surge at the input end with a fast frequency rise and the AC grid has very fast acting power reduction controls for increasing frequency transients.
- What VSM actions are needed for upward frequency transients, is an asymmetric energy store viable?
- What damping actions and magnitude are needed by a VSM system?
- Changes to the inverter to accommodate several new effects including negative sequence currents.
- Rating the life of the VSM energy store versus the normal grid phase changes each which produces a power change in the VSM energy store. To do this 1 cycle grid data on frequency and phase is needed.

 Copyright 2018 all rights reserved

Three big questions for a future AC grid

1. How will the majority of primary response power be supplied in the future:
   - 1.1. By having approximately 2 GW of electricity storage systems to supply the primary response power at high RoCoF rates. If these systems are also designed to the VSM specification with an H = 14 then this gives 28 GW.s of synthetic inertia. The renewable energy systems then only need to supply he extra synthetic inertia.
   - 1.2. By having larger energy stores in the VSM renewable energy and VSM electricity storage systems to supply inertia power and primary response power.
   - 1.3. By a mixture of 1.1 and 1.2.

2. How will inertia be supplied in the future:
   - 2.1. By the remaining rotating synchronous generators plus VSM technology in a significant part of the renewable energy systems and electricity storage systems.
   - 2.2. By the remaining rotating synchronous generators plus added real inertia without VSM technology in a significant part of the renewable energy systems and electricity storage systems.
   - 2.3. By a mixture of 2.1 and 2.2.

3. If selected how will the extra added real inertia be supplied in the future:
   - 3.1. By a very large number of synchronous compensators.
   - 3.2. By a smaller number of advanced directly connected flywheels with advanced features to maximise their benefits.
   - 3.3. By a mixture of 3.1 and 3.2.

 Copyright 2018 all rights reserved

Thank you

Energy Storage Consulting Eric Ltd trading as ENSTORE.
Registered in United Kingdom, Number 09353302.
Registered Office, 20-22, Wenlock Road, London, England, N1 7GU
Email ericlewis@coldmail.co.uk Phone 07837 517 062

 Copyright 2018 all rights reserved

Modification record

Issue 001	09-05-2018	• Initial issue

 Copyright 2018 all rights reserved